OPEN Industry Standard, Flexible Architecture

GREEN Less Heat, Less Power Consumption

STABLE Robust Design, Quality Parts

Stable and
Reliable Solution

Server/Workstation
Motherboard

1U4LW Series

User Manual

English

Version 1.01
Published Jan. 2025
Copyright©2023 ASRock Rack Inc. All rights reserved.

Copyright Notice:

No part of this documentation may be reproduced, transcribed, transmitted, or translated in any language, in any form or by any means, except duplication of documentation by the purchaser for backup purpose, without written consent of ASRock Rack Inc.

Products and corporate names appearing in this documentation may or may not be registered trademarks or copyrights of their respective companies, and are used only for identification or explanation and to the owners' benefit, without intent to infringe.

Disclaimer:

Specifications and information contained in this documentation are furnished for informational use only and subject to change without notice, and should not be constructed as a commitment by ASRock Rack. ASRock Rack assumes no responsibility for any errors or omissions that may appear in this documentation.

With respect to the contents of this documentation, ASRock Rack does not provide warranty of any kind, either expressed or implied, including but not limited to the implied warranties or conditions of merchantability or fitness for a particular purpose.

In no event shall ASRock Rack, its directors, officers, employees, or agents be liable for any indirect, special, incidental, or consequential damages (including damages for loss of profits, loss of business, loss of data, interruption of business and the like), even if ASRock Rack has been advised of the possibility of such damages arising from any defect or error in the documentation or product.

This device complies with Part 15 of the FCC Rules. Operation is subject to the following two conditions:

(1) this device may not cause harmful interference, and
(2) this device must accept any interference received, including interference that may cause undesired operation.

CALIFORNIA, USA ONLY

The Lithium battery adopted on this motherboard contains Perchlorate, a toxic substance controlled in Perchlorate Best Management Practices (BMP) regulations passed by the California Legislature. When you discard the Lithium battery in California, USA, please follow the related regulations in advance.
"Perchlorate Material-special handling may apply, see www.dtsc.ca.gov/hazardouswaste/perchlorate"

ASRock Rack's Website: www.ASRockRack.com

Setting up the Server in a Restricted Access Location/Restricted Access Area

- Access can only be gained by service persons or by users who have been instructed about the reasons for the restrictions applied to the location and about any precautions that shall be taken.
- Access is through the use of a tool or lock and key, or other means of security, and is controlled by the authority responsible for the location.
- Leave enough clearance (25 inches in the front and 30 inches in the back of the rack) to allow the front door to be opened completely and to allow for sufficient airflow.
- This product is for installation merely in a Restricted Access Location.
- This product is not suitable for use with visual display work place devices according to §2 of the the German Ordinance for Work with Visual Display Units.
- Only skilled person and Instructed person can remove the chassis covers to access the inside of the system.

Replaceable Batteries

CAUTION
RISK OF EXPLOSION IF BATTERY IS REPLACED BY AN INCORRECT TYPE.
DISPOSE OF USED BATTERIES ACCORDING TO THE INSTRUCTIONS

Warning

When removal of the chassis lid required for servicing:
- Turn off power and unplug any power cords/cables, and
- Reinstall the chassis lid before restoring power.

Important Safety Instructions

Pay close attention to the following safety instructions before performing any of the operation. Basic safety precautions should be followed to protect yourself from harm and the product from damage:

- Operation of the product should be carried out by suitably trained, qualified, and certified personnel only to avoid risk of injury from electrical shock or energy hazard.
- Disconnect the power cord from the wall outlet when installing or removing main system components, such as the motherboard and power supply unit.
- Place the system on a stable and flat surface.
- Use extreme caution when working with high-voltage components.
- When handling parts, use a grounded wrist strap designed to prevent static discharge.
- Keep the area around the system clean and clutter-free.
- Keep all components and printed circuit boards (PCBs) in their antistatic bags when not in use.
- Handle a board by its edges only; do not touch its components, peripheral chips, memory modules or contacts.

Contents

Chapter 1 Introduction **1**

1.1 Shipping Box Contents 2

1.2 Specifications 3

Chapter 2 Server System Overview **4**

2.1 System Components 4

2.2 Internal Features 5

2.3 System Front Panel 6

2.4 System Rear Panel 6

2.5 Front Control Panel Buttons and LEDs 7

2.6 Drive Tray LEDs 9

Chapter 3 Hardware Installation and Maintenance **10**

3.1 Server Top Cover 11

3.2 Hard Drive 13

3.3 Power Supply 17

3.4 System Fan 19

3.5 Add-on Card 20

3.6 Air Duct 22

Appendix A **27**

Installing the CPU 27

Appendix B **49**

Installation of Memory Modules (DIMM) 49

Appendix C **51**

Block Diagram 51

Chapter 1 Introduction

Thank you for purchasing 1U4LW Series, a reliable barebone system produced under ASRock Rack's consistently stringent quality control. It delivers excellent performance with robust design conforming to ASRock Rack's commitment to quality and endurance.

This guide provides the instructions of insertion and extraction of chassis components, such as chassis covers, system fans, power supplies, hard disk drive trays, and other main components this system supports. If the system is pre-installed a serverboard, please refer to the user's manual of the serverboard for the information of the serverboard components, specifications and BIOS settings.

System	ASRock Rack Server Board
1U4LW-E3C224	E3C224
1U4LW-X470	X470D4U
1U4LW-X470 RPSU	X470D4U
1U4LW-X570/2L2T	X570D4U-2L2T
1U4LW-X570/2L2T RPSU	X570D4U-2L2T
1U4LW-X570	X570D4U
1U4LW-X570 RPSU	X570D4U
1U4LW-C252	E3C252D4U
1U4LW-ICX/2T	SPC621D8U-2T
1U4LW-ROME/2T	ROMED8U-2T
1U4LW-B650/2L2T	B650D4U-2L2T
1U4LW-B650/2L2T RPSU	B650D4U-2L2T

Because the hardware specifications might be updated, the content of this documentation will be subject to change without notice.

The illustrations shown in this manual are for reference purposes only and may not exactly match the model you purchase.

If you require technical support related to this system, please visit our website for specific information about the model you are using.
http://www.asrockrack.com/support/

English

1.1 Shipping Box Contents

Item	Quantity		
1U4LW-	C224/C232	X470 Series	X570 Series
1U4LW Series 1U Barebone	1	1	1
System Board (MB)	1	1	1
Power Supply Unit	1	1 (RPSU: 2)	1 (RPSU: 2)
System Fan	5	5	5
HDD Backplane (BPB)	1	1	1
Front Panel Board (FPB)	1	1	1
Accessory Box	1	1	1
1U Cooler/Heatsink	1	1	1
Riser Board	1	1	1
Air Duct*	0	3	2
Slide Rail	1	1	1

Item	Quantity			
1U4LW-	C252	ICX/2T	ROME/2T	B650/2L2T
1U4LW Series 1U Barebone	1	1	1	1
System Board (MB)	1	1	1	1
Power Supply Unit	1	1	1	1
System Fan	5	4	5	5
HDD Backplane (BPB)	1	1	1	1
Front Panel Board (FPB)	1	1	1	1
Accessory Box	1	1	1	1
1U Cooler/Heatsink	1	1	1	1
Riser Board	1	1	1	1
Air Duct*	1	1	1	1
Slide Rail	1	1	1	1

If any items are missing or appear damaged, contact your authorized dealer.

1.2 Specifications

1U4LW Series		
System Physical Status		
Form Factor	1U Rackmount	
Dimension (D x W x H)	536.35 x 430 x 43.3mm (21.1”x16.9”x1.7”)	
Support MB Size	mATX / ATX / uATX	
Front Panel		
Buttons	• Power On/Standby button • ID button • System reset button • NMI Button *(for 1U4LW-X470 and 1U4LW-C252 only)*	
LEDs	• Power LED • Identification LED • Hard drive activity LED • 4 x Network activity LED • System event LED	
I/O Ports	2 x USB 3.2 Gen1 ports	
Drive Bay		
External	4 x 3.5" SATA HDD (6Gb/s)	
Internal	**1U4LW-C252:** 2 x 2.5" SATA HDD (or 1 x 2.5" SATA HDD + 1 x SATA-type Slim ODD (optional)) **Other 1U4LW Series Models:** 3 x 2.5" SATA HDD **1U4LW-B650/2L2T:** N/A	
System Cooling		
Fan	**1U4LW-ICX/2T:** 4 x 40 x 28 mm PWM Easy-Swap Fans **Other 1U4LW Series Models:** 5 x 40 x 28 mm PWM Easy-Swap Fans	
Power Supply		
Type	Single PSU (Flex-ATX)	Redundant PSU
Output Watts	1U4LW-E3C224: 400W 1U4LW-C252: 400W 1U4LW-ROME/2T: 600W 1U4LW-ICX/2T: 600W 1U4LW-B650/2L2T: 400W	1U4LW-X470 RPSU: 300W 1U4LW-X570 RPSU: 450W 1U4LW-B650/2L2T RPSU: 450W
Efficiency	Gold	Gold

**Please be noted that the functions are supported depending on the type of the server board.*

Chapter 2 Server System Overview

This chapter provides diagrams showing the location of important components of the server system.

2.1 System Components

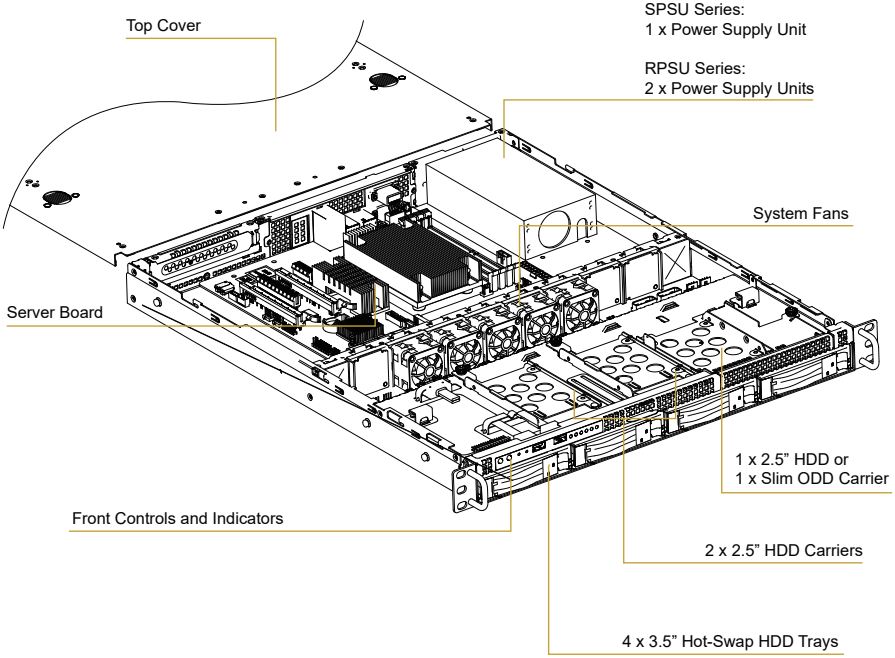

**The illustrations in this User Manual are for references only. The actual product may be slightly different by SKU.*

English

2.2 Internal Features

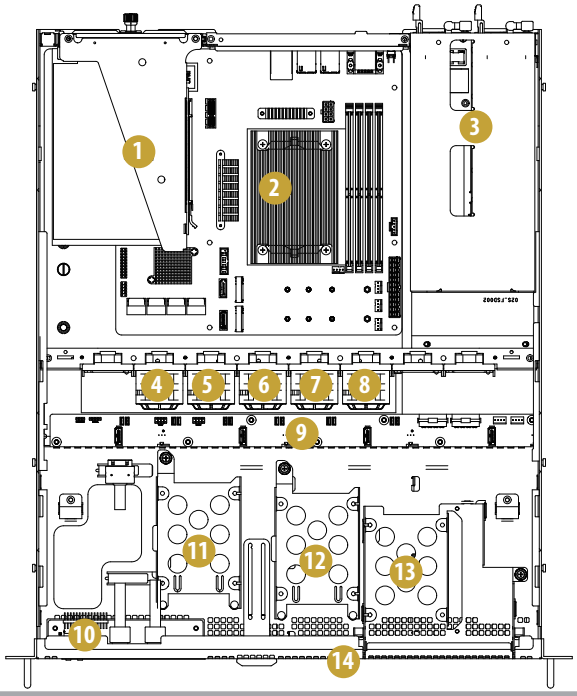

No.	From
1	Riser Card
2	Serverboard
3	1U4LW SPSU Series: 1 x Power Supply Unit (PSU) 1U4LW RPSU Series: 2 x Power Supply Units (PSU)
4	System Fan 5 *(1U4LW-ICX/2T not supported)*
5	System Fan 4
6	System Fan 3
7	System Fan 2
8	System Fan 1
9	HDD Backplane Board (BPB)
10	Front Panel Board (FPB)
11	2.5" SATA HDD *(1U4LW-C252 / 1U4LW-B650/2L2T not supported)*
12	2.5" SATA HDD *(1U4LW-B650/2L2T not supported)*
13	2.5" SATA HDD or Slim Optical Disc Drive (ODD) (optional) *(1U4LW-B650/2L2T not supported)*
14	4 x 3.5" SATA HDDs (Hot-swapable)

2.3 System Front Panel

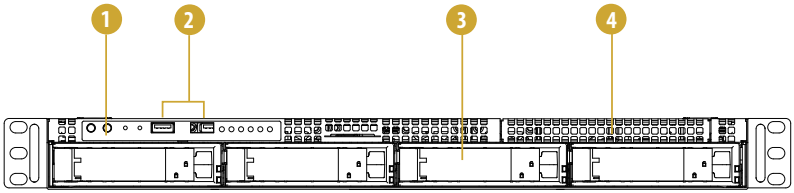

No.	Description
1	Control Panel Buttons and LEDs
2	2 x USB 3.2 Gen1 Ports
3	4 x 3.5" Hot-Swap HDD Trays
4	1 x Slim ODD Carrier (Optional) *(for 1U4LW-C252 only)*

2.4 System Rear Panel

1U4LW SPSU Series

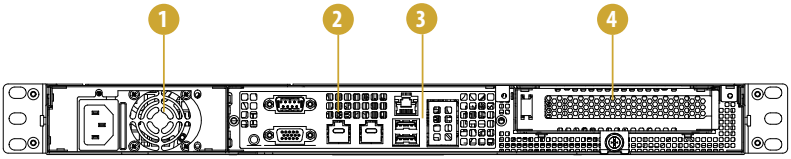

1U4LW RPSU Series

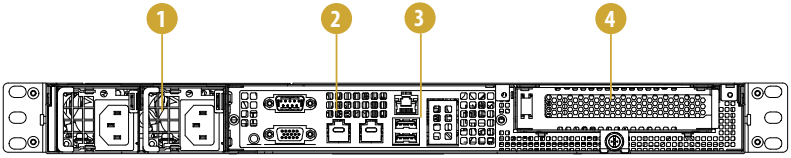

No.	Description
1	1U4LW-SPSU: 1 x Power Supply Unit (PSU) 1U4LW-RPSU: 2 x Power Supply Units (PSU)
2	Rear Vent
3	I/O Shield (depends on the specification of the server board)
4	PCI Express Slot (for the riser card)

English

2.5 Front Control Panel Buttons and LEDs

Front Control Panel *(1U4LW-X470 / 1U4LW-C252 / 1U4LW-ICX/2T / 1U4LW-ROME/2T Series)*

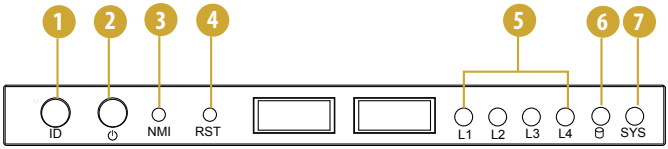

No.	Description
1	ID Button and LED
2	Power Button and LED
3	NMI (Nonmaskable Interrupt) Button
4	System Reset Button
5	LAN1, LAN2, LAN3, LAN4 Activity LED *LAN1 and LAN2 are only supported on the 1U4LW-ICX/2T / 1U4LW-ROME/2T systems.* *LAN3 and LAN4 are only supported on the 1U4LW-C252 system.*
6	HDD Status LED
7	System Status LED

	LAN1	LAN2	LAN3	LAN4
1U4LW-X470	V	V	V	V
1U4LW-C252			V	V
1U4LW-ICX/2T	V	V		
1U4LW-ROME/2T	V	V		

**Please be noted that the functions are supported depending on the type of the server board.*

Front Control Panel *(1U4LW-X570 / 1U4LW-B650/2L2T Series)*

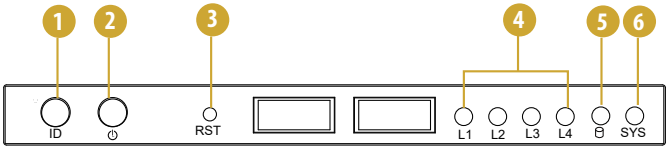

No.	Description
1	ID Button and LED
2	Power Button and LED
3	System Reset Button
4	LAN1, LAN2, LAN3, LAN4 Activity LED
5	HDD Status LED
6	System Status LED

**Please be noted that the functions are supported depending on the type of the server board.*

NMI (Nonmaskable Interrupt) Button

Press the NMI button with a paper clip or pin to generate a nonmaskable interrupt and to put the server in a halt state for examination.

System Reset Button

When the system is completely unresponsive, press the system reset button to reboot the server without shutting it off and initialize the system.

ID Button

Press the ID button to toggle the front panel ID LED and the baseboard ID LED on and off. You are able to locate the server you're working on from behind a rack of servers.

Power Button

Press the power switch button to toggle the system power on and standby/sleep modes.
To remove all power from the system completely, disconnect the power cord from the server.

Status LED Definitions

Power LED	
Status	**Description**
Blue	Power on
Blinking Blue	Standby(Sleep) mode
Off	Power off

ID LED	
Status	**Description**
Blue	System identification is active.
Off	System identification is disabled.

System Status LED	
Status	**Description**
Off	Running or normal operation
Yellow	At least one sensor has critical alert

HDD Status LED	
Status	**Description**
Blinking Green	HDD access
Off	HDD idle

LAN LED	
Status	**Description**
Blinking Green	Network access
Solid Green	LAN is present.
Off	No LAN is present.

2.6 Drive Tray LEDs

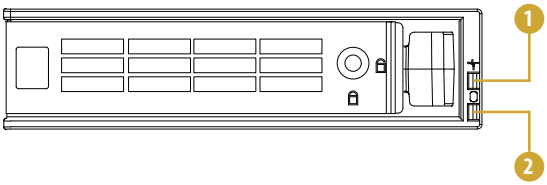

No.	Description
1	HDD Power LED
2	HDD Activity LED

Status LED Definitions

HDD Power LED	
Status	**Description**
Blue	HDD powered-on
Off	No power to HDD

HDD Activity LED	
Status	**Description**
Solid Green	HDD active
Blinking Green	HDD accessing or reading
Red	HDD failed
Off	HDD powered-off

Chapter 3 Hardware Installation and Maintenance

This chapter helps user to assemble the chassis and install components.

Before You Begin

Before working with the server, pay close attention to the "Important Safety Instructions" at the beginning of this manual.

> ⚠ *Ensure the motherboard battery is installed before unplugging the power cord or installing/removing the motherboard. Failure to follow this precaution may result in physical injury or damage to motherboard components.*

1. Make sure the server is powered off.
   Power down the server if it is still running.
   (1) Press the Power button to power off the server from full-power mode to standby-power (sleep) mode. The Power LED at the front turns from solid green to blinking green.
   (2) Disconnect the power cord first from the AC outlet and then from the server.
   The power LED turns off.

> ⚠ *The server is not completely powered down when you press the Power button on the front panel. The Power button lets the server toggle between Power On and Standby (Sleep) modes. Some internal circuitry remain active in the Standby mode. To remove all power from the system completely, be sure to disconnect the power cord from the server.*

2. Ensure having a clean and stable working environment. Avoid dust and dirt because contaminants may cause malfunctions.
3. Ground yourself properly before touching any system component. A discharge of static electricity may damage components. Wear a grounded wrist strap if available.

Installing Procedures

The followings are prerequisite to be installed.

- 3.5" or 2.5" HDD(s)
- Power Supply Unit(s) (Pre-installed)
- System Fans (Pre-installed)
- Server Board (Pre-installed)
- HDD Backplane (Pre-installed)

> ⚠ *1. Some components are already pre-installed. Simply properly connect the relavant cables before or after installation. See the Quick Installation Guide for more details.*
> *2. Refer to the user manual of the server board you use for instructions on how to install server board components.*

English

3.1 Server Top Cover

Removing the Server Top Cover

1. Before removing the top cover, power off the server and unplug the power cord.
2. The system must be operated with the chassis top cover installed to ensure proper cooling.

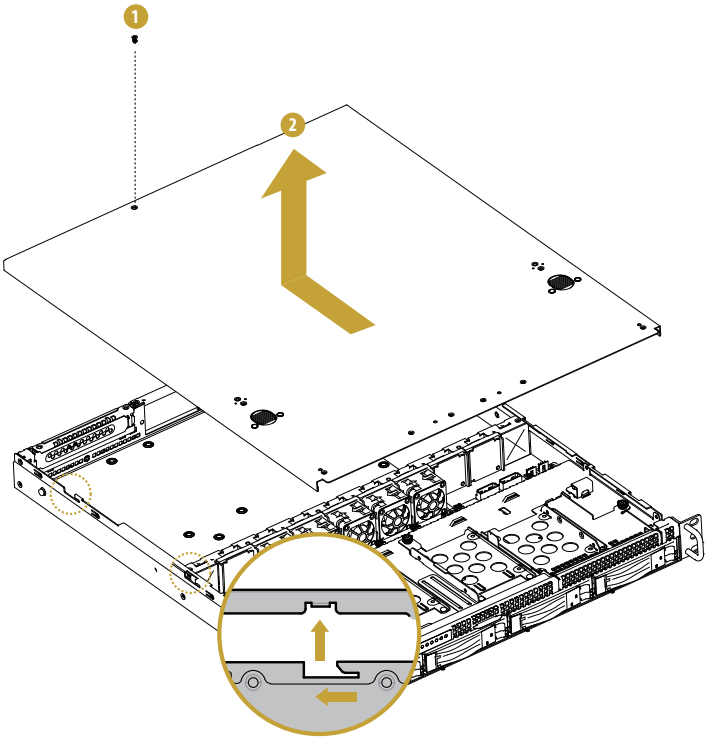

1. Remove the screws that secure the top cover to the chassis.
2. Push the top cover toward the rear of the chassis to remove the cover from the locked position.
3. Lift up and remove the top cover.

Installing the Server Top Cover

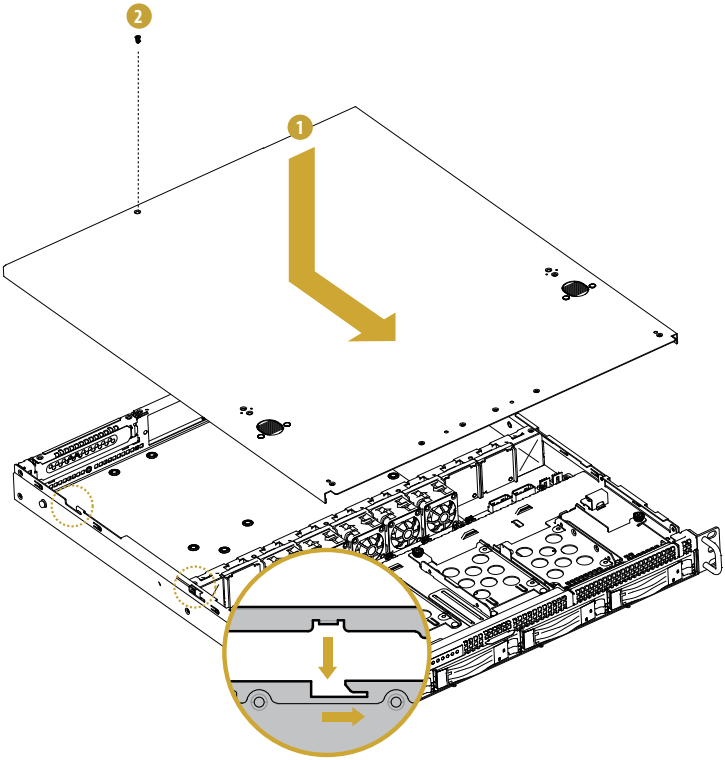

1. Lower the top cover on the chassis, making sure the side latches align with the cutouts.
2. Slide the top cover toward the front.
3. Secure the top cover with the screws.

3.2 Hard Drive

Removing 3.5” Hard Drive Trays from the Chassis

1. Press the locking lever latch on the drive tray to unlock the retention lever.
2. Rotate the lever out and away from the module bay and pull the hard drive out of the HDD tray.

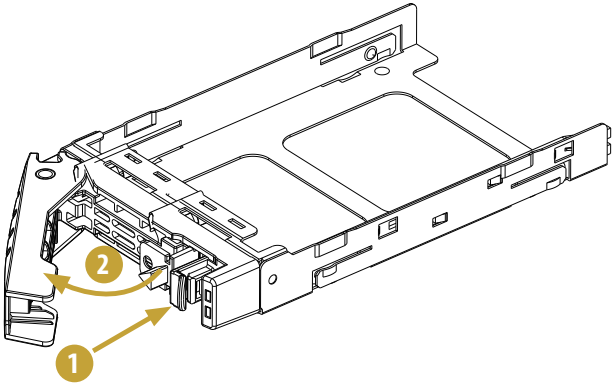

Installing a 3.5” Hard Drive to the Hard Drive Tray

1. Place the 3.5" HDD into the tray with the printed circuit board side facing down. Carefully align the mounting holes in the hard drive and the tray.
2. Secure the hard drive using the four screws.
3. Slide the drive tray into the HDD bay until the drive is fully seated.
4. Push in the locking lever to lock the HDD tray into place.

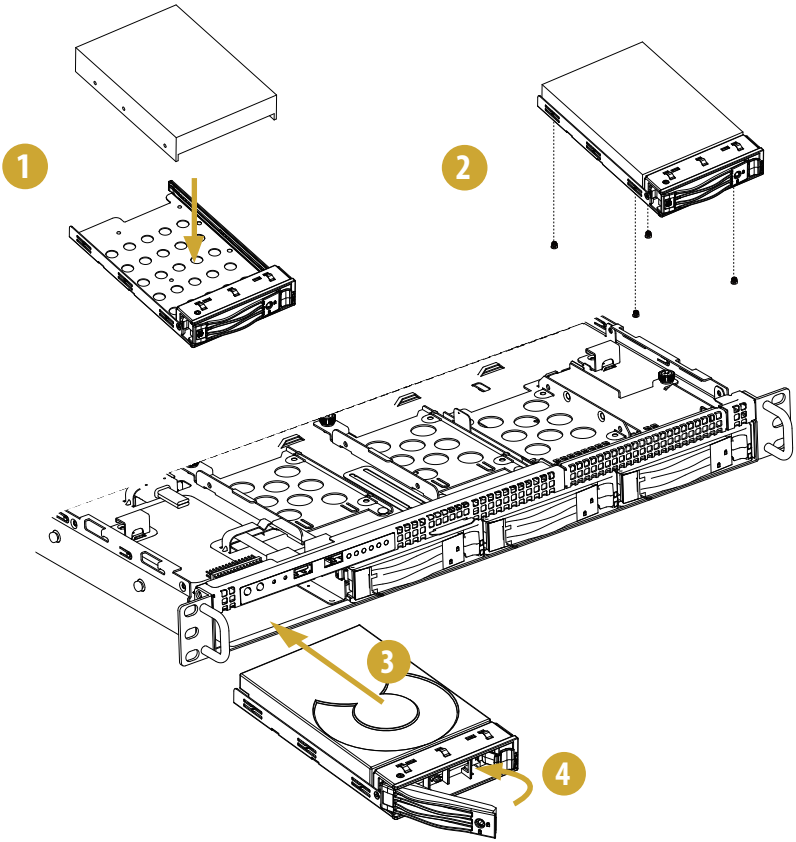

Removing a 2.5” Hard Drive Carrier from the Chassis

1. Hand-release the thumbscrew that secures the hard drive carrier to the chassis.
2. Push the carrier toward the rear of the chassis to remove it from the locked position. Then remove the hard drive carrier.

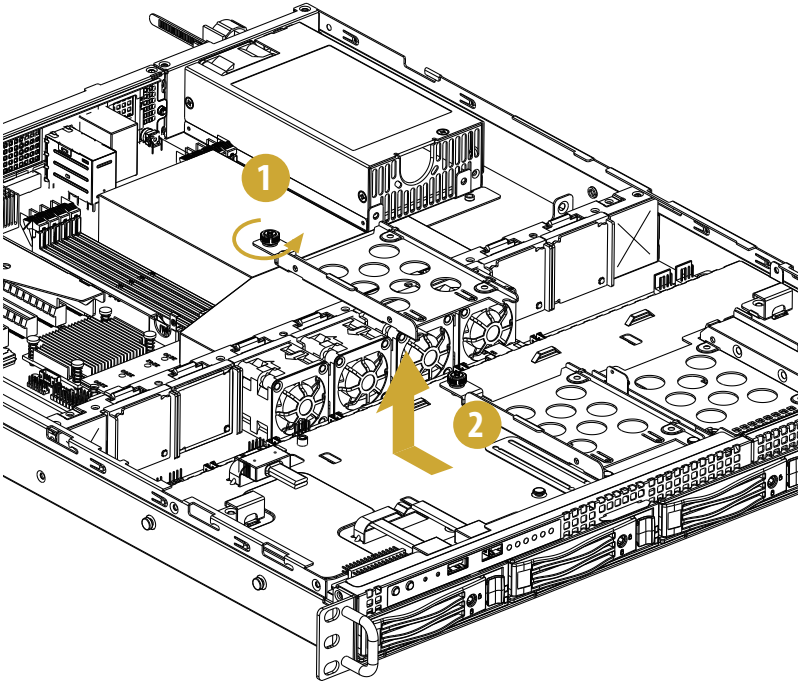

Installing a 2.5” Hard Drive to the Hard Drive Carrier

1. Place a 2.5" HDD into the carrier with the printed circuit board side facing down.
2. Secure the hard drive to the carrier with screws.
3. Put the hard drive assembly back into the chassis and slide it toward the front.
4. Hand-tighten the thumbscrew to secure the hard drive assembly to the chassis.

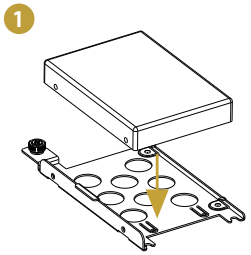

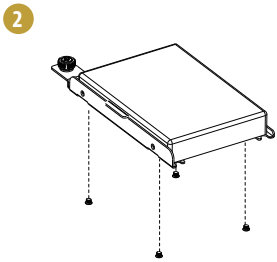

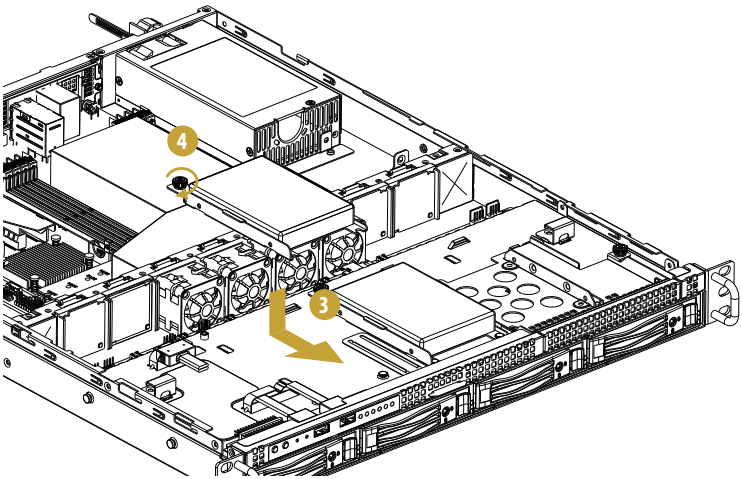

3.3 Power Supply

Installing and Removing the Power Supply

Before replacing the power supply, power off the server, unplug the power cord, and disconnect all wiring from the power supply.

The 1U4LW SPSU Series system supports single PSU only.
The 1U4LW-RPSU Series system can accommodate two AC or two DC power supplies in the bay at the rear of the chassis. Each unit provides up to 300 Watts of power. One power supply is required for full load operation, with the other power supply purely as a redundant, load-sharing backup. It can be removed without affecting system operation.

Installing the Power Supply Unit

1. Align the power supply unit with the power supply slot. Ensure that the LED appears on the lower right when you are installing the power supply unit.
2. Carefully slide the PSU all the way into the power supply bay until it clicks into place.

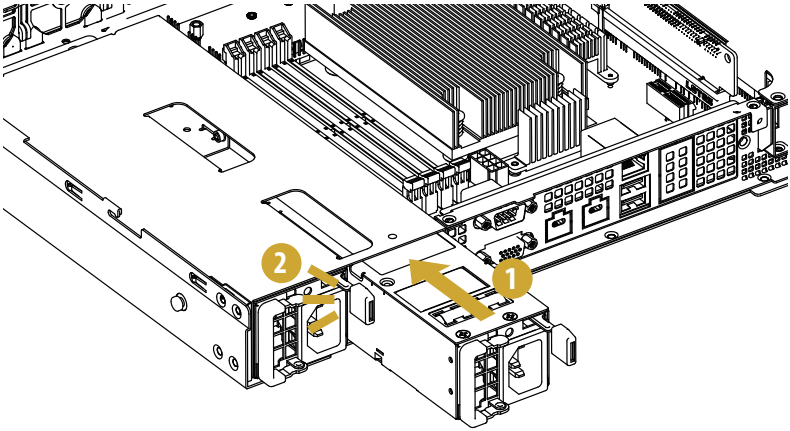

Removing the Power Supply Unit

To remove a failed power supply, identify the failed power supply by checking the power supply LEDs on the PSU.

1. Hold onto the power supply handle while pressing the locking lever towards the power supply handle.*

   **The illustration is for references only. The actual PSU type may be slightly differnet by models.*

2. Pull to remove the power supply from the chassis.

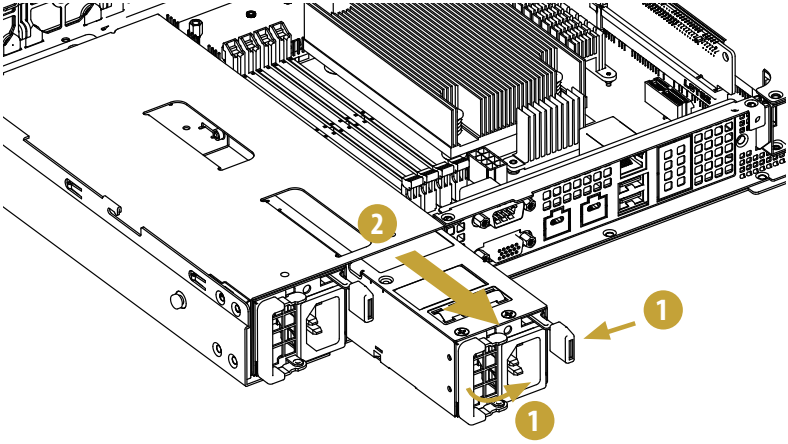

1. Before replacing the power supply, power off the server, unplug the power cord, and disconnect all wiring from the power supply.
2. In a redundant system, you do not need to power down the server.

3.4 System Fan

Replacing the Simple-Swap Fan

1. Press and hold the clip on the fan.
2. Press and hold the clip on the middle fan.

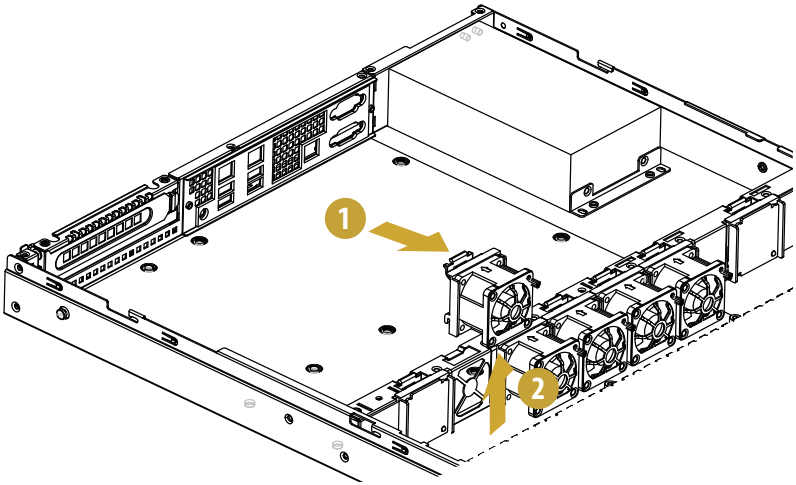

3.5 Add-on Card

1. *You can install an add-on card to the chassis only when you have a riser card installed on the server board.*
2. *Before installing the add-on card, power off the server and unplug the power cord.*

Removing the Riser-Card Bracket from the Chassis

1. Hand-release the thumbscrew that secures the riser-card bracket on the chassis.
2. Lift up the riser-card bracket.
3. Remove the screw securing the blanking plate on the bracket.
4. Slide the blanking plate out sideways.

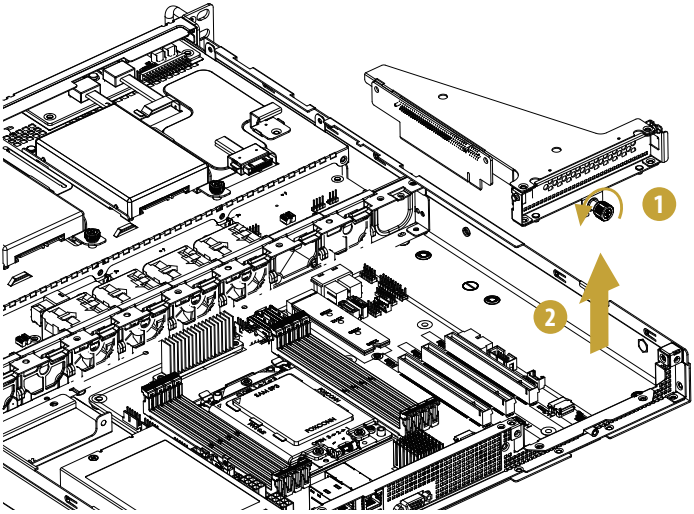

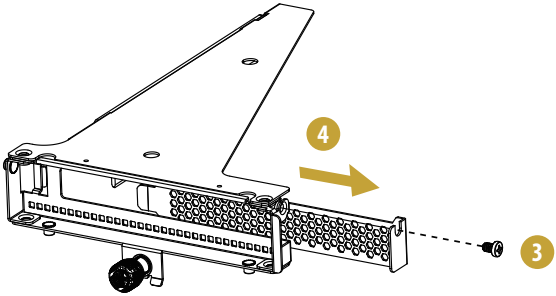

Installing the Add-on Card

1. Install the add-on card to the riser-card bracket.
2. Secure the add-on card to the bracket with a screw .
3. Align the riser-card assembly with the openings of the chassis.
4. Hand-tighten the thumbscrew to secure the assembly to the chassis.

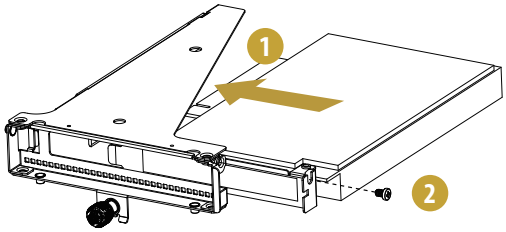

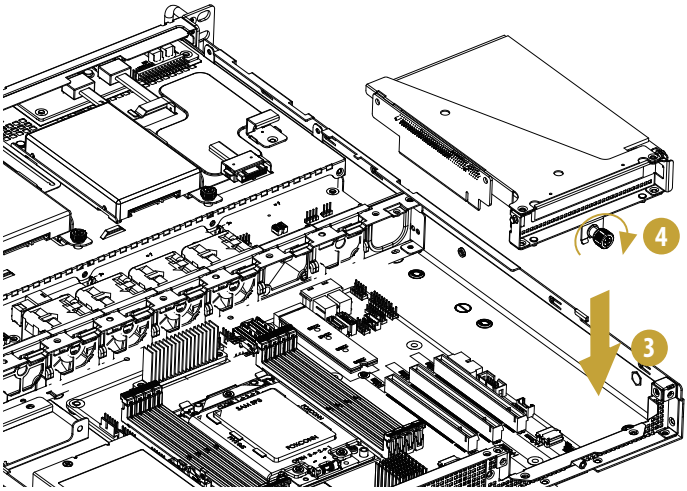

3.6 Air Duct

1. If an add-on card is already installed, remove the add-on card assembly from the chassis before installing the air duct. If an add-on card is not installed yet, install the add-on card first. Please see the chapter entitled "Add-on Card" for more instructions.

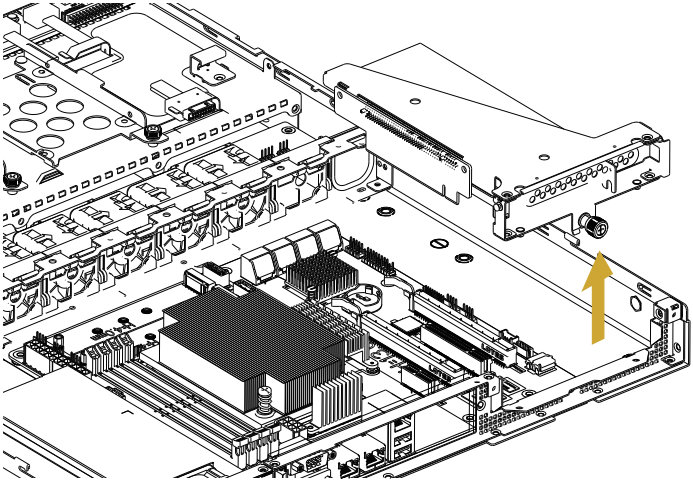

2. **1U4LW-X470 Series only**:
   Position the fan duct for the riser card in the chassis and carefully insert the tab on the air duct into the groove on the fab bar.

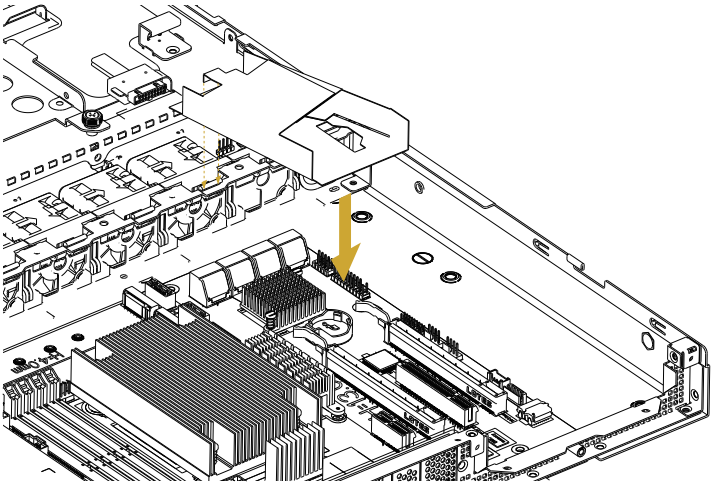

3. Then install the add-on card assembly to the chassis.

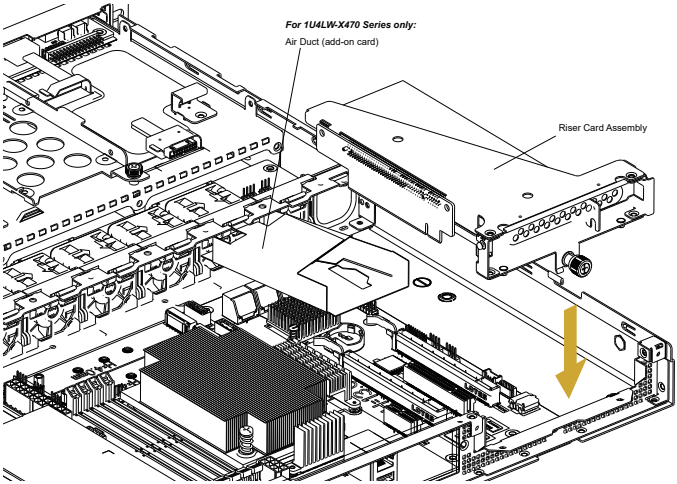

4. **1U4LW-X470 Series only**:
   Make sure the add-on card assembly is well aligned with the air duct.

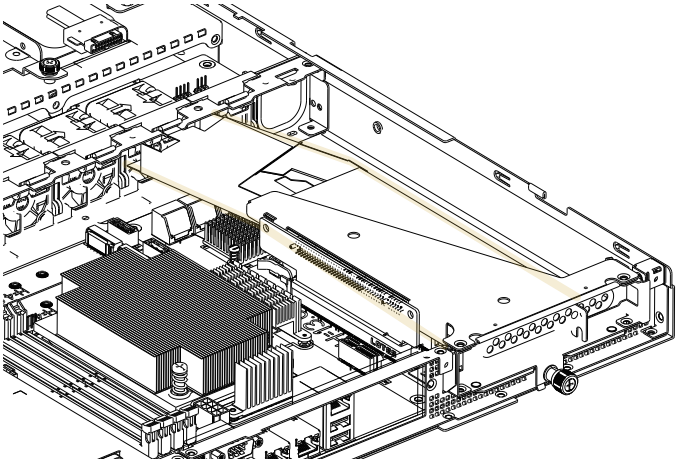

5. Align the air duct over the heat sink and carefully lower the air duct in place.

Please note the illustrations of the air ducts here are examples only. The looks may be different by products.

1U4LW-X470 Series

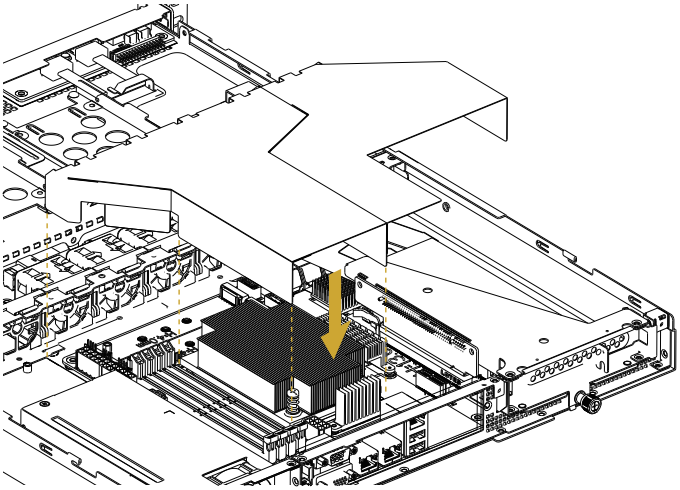

1U4LW-X570 Series

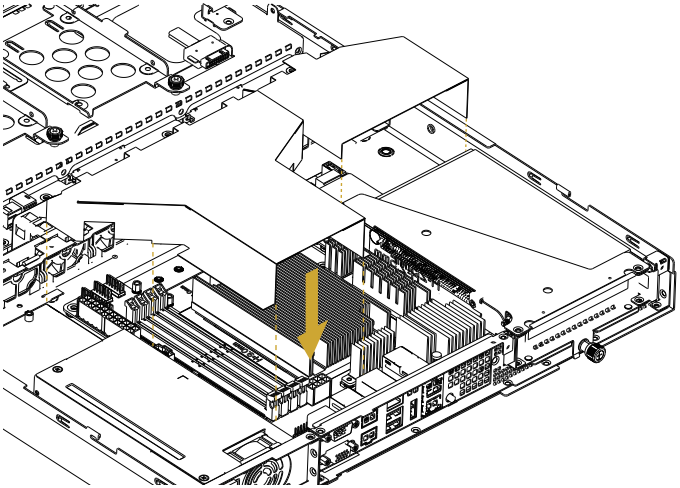

1U4LW-C252 Series

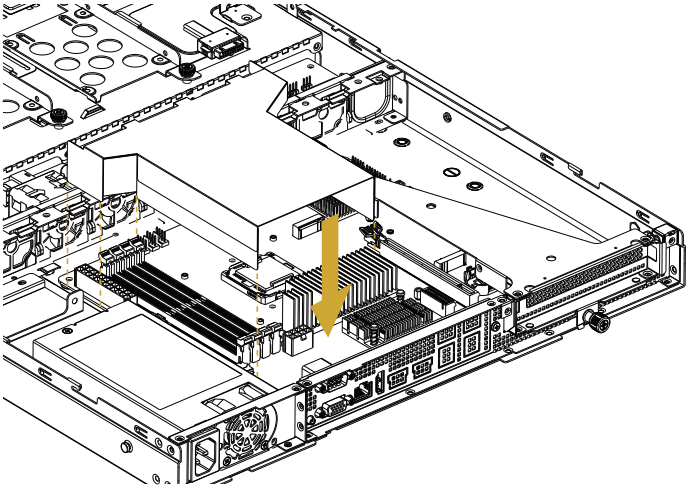

1U4LW-ICX/2T Series

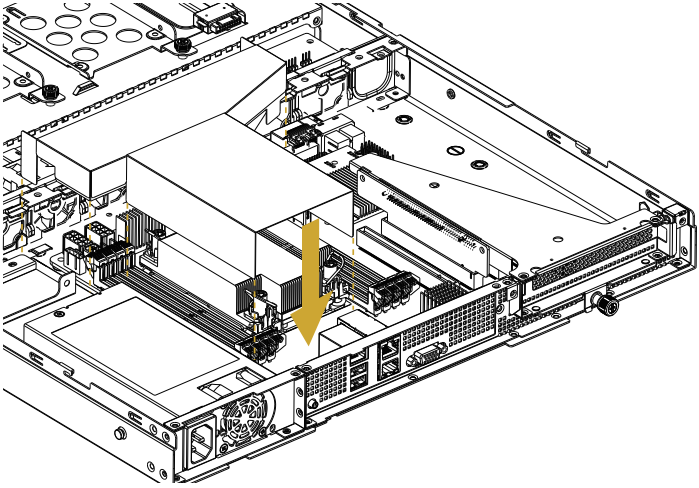

1U4LW-ROME/2T Series

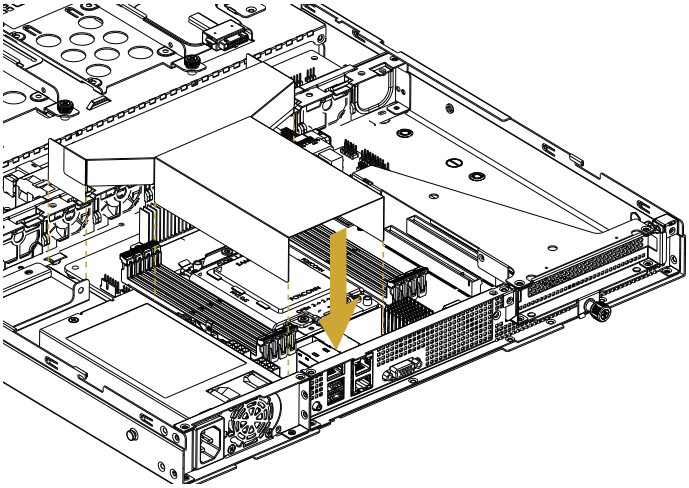

1U4LW-B650/2L2T

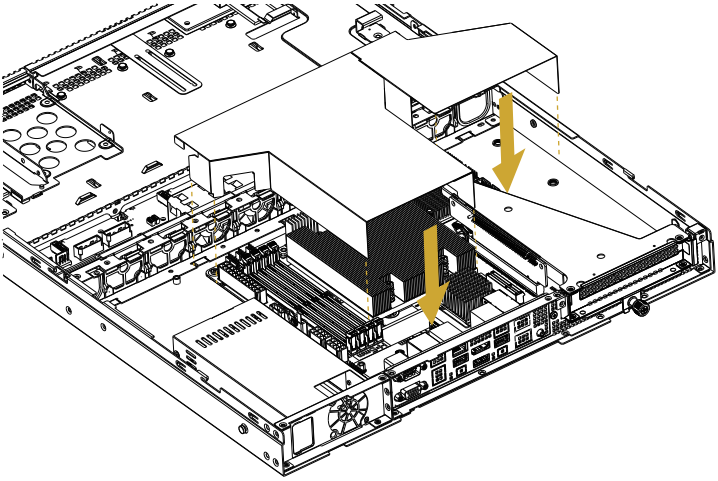

Appendix A

Installing the CPU (AMD AM4 Socket)

1

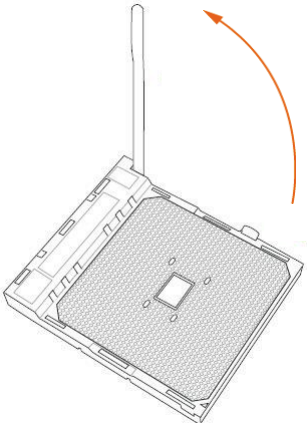

2

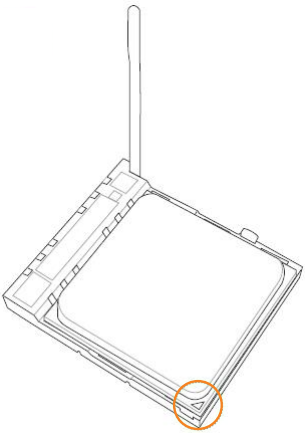

3

1

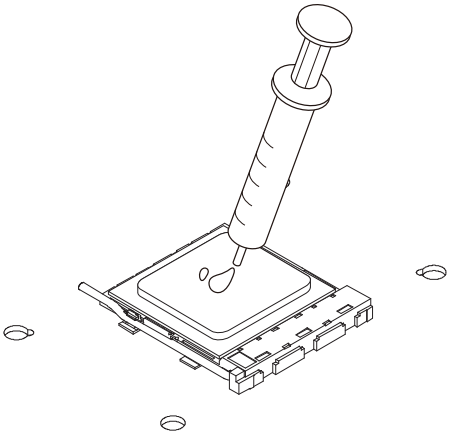

2

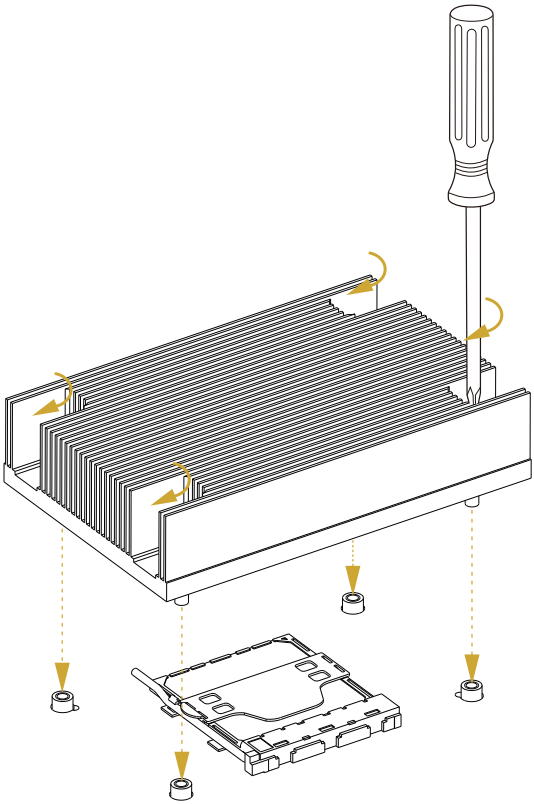

Please be aware of the correct direction when you install the CPU heatsink. Make sure the the arrow on the CPU heatsink is pointing to the opposite side of the system fan.

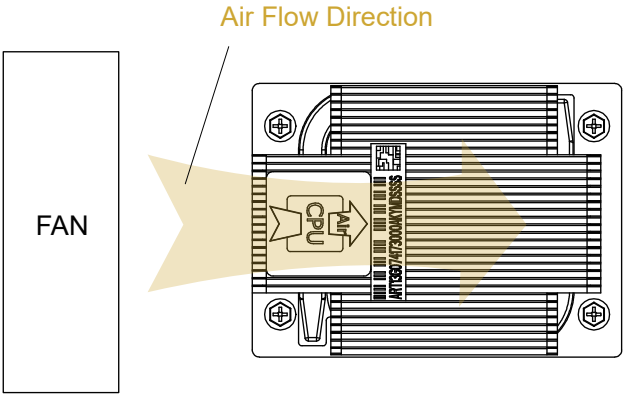

Installing the CPU (LGA 1200 Socket)

1. *Before you insert the 1151-Pin CPU into the socket, please check if the PnP cap is on the socket, if the CPU surface is unclean, or if there are any bent pins in the socket. Do not force to insert the CPU into the socket if above situation is found. Otherwise, the CPU will be seriously damaged.*
2. *Unplug all power cables before installing the CPU.*

Illustrations in this User Manual are provided for reference only and may slightly differ from actual product appearances.

1

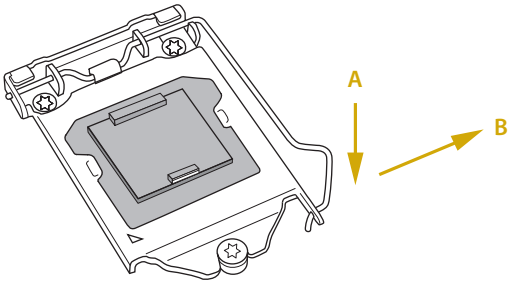

2

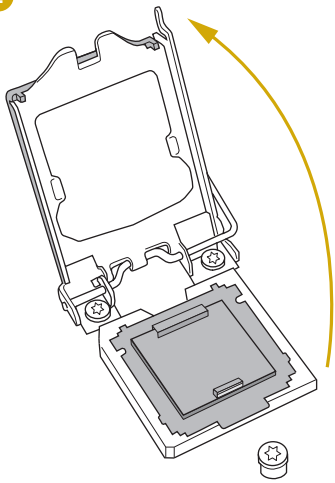

3

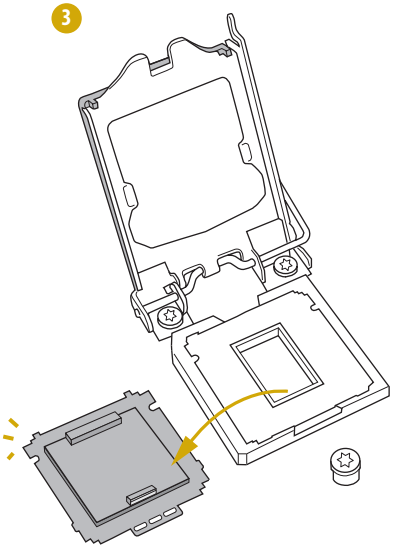

4

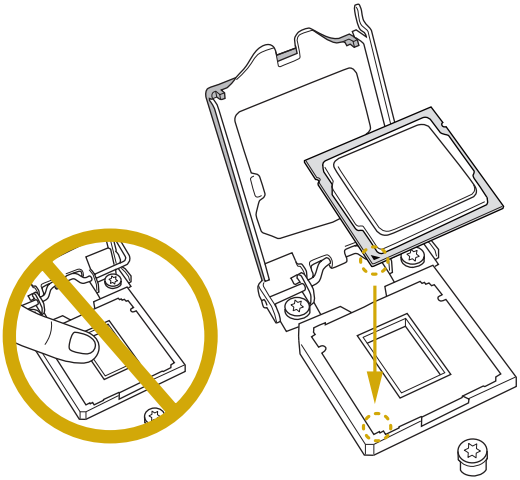

5

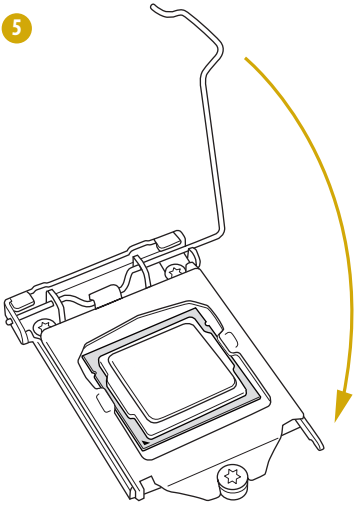

6

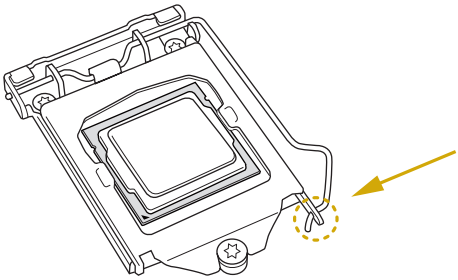

Please save and replace the cover if the processor is removed. The cover must be placed if you wish to return the motherboard for after service.

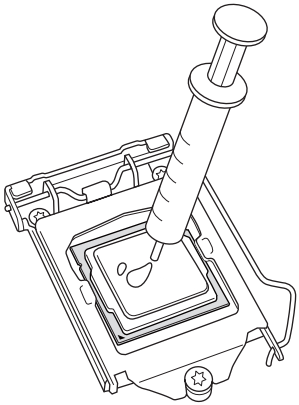

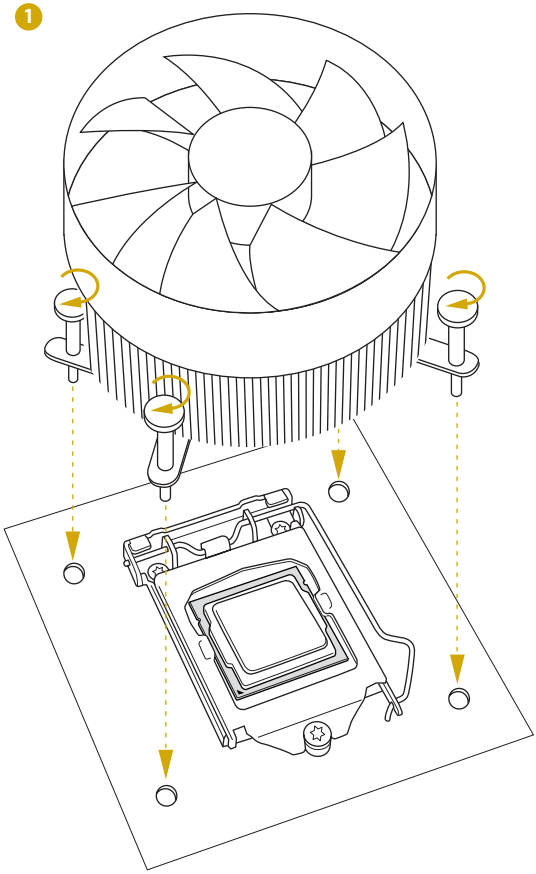
1

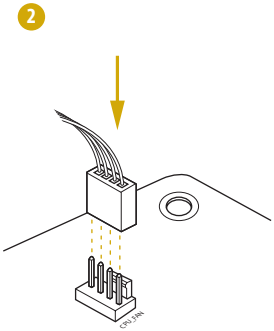
2
CPU_FAN

Installing the CPU (LGA 4189 Socket)

1. *Before you insert the CPU into the socket, please check if the PnP cap is on the socket, if the CPU surface is unclean, or if there are any bent pins in the socket. Do not force to insert the CPU into the socket if above situation is found. Otherwise, the CPU will be seriously damaged.*
2. *Unplug all power cables before installing the CPU.*

1

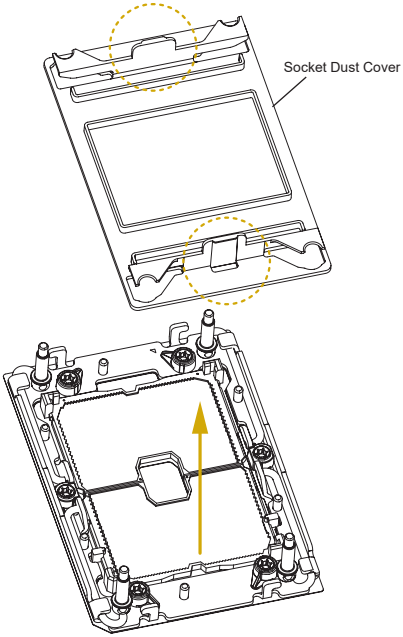

1. *Before you installed the heatsink, you need to spray thermal interface material between the CPU and the heatsink to improve heat dissipation.*
2. *Illustration in this documentation are examples only. Heatsink or fan cooler type may differ.*

2

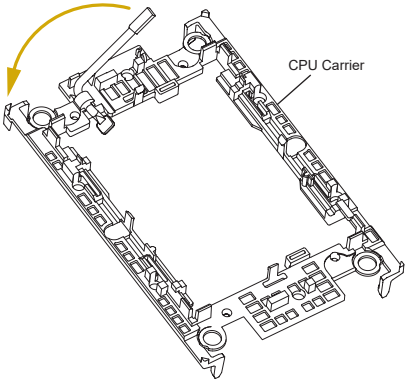

3

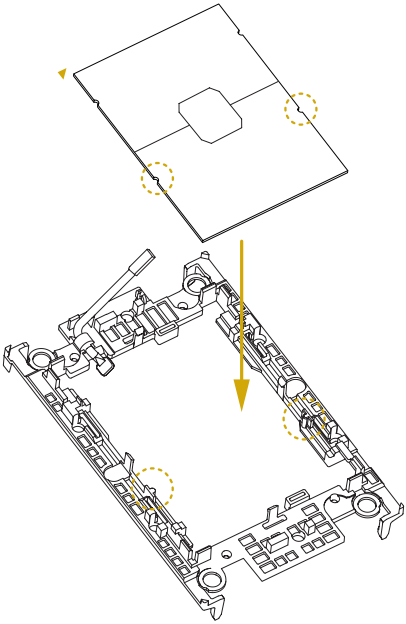

4

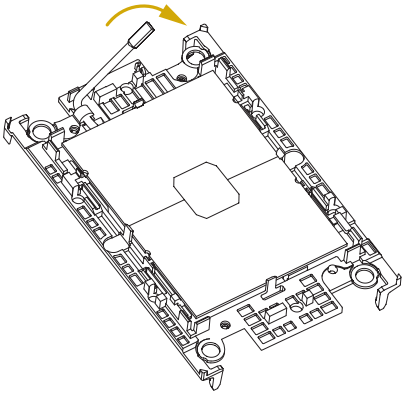

5

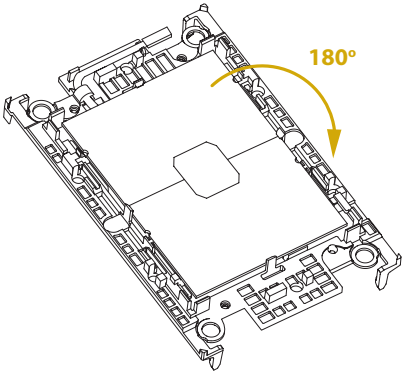

6

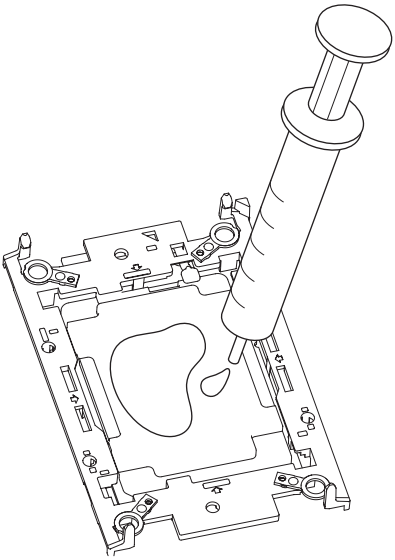

7

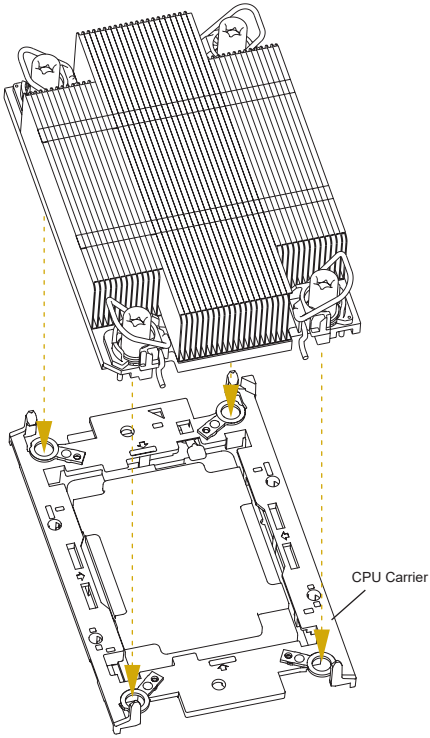

8

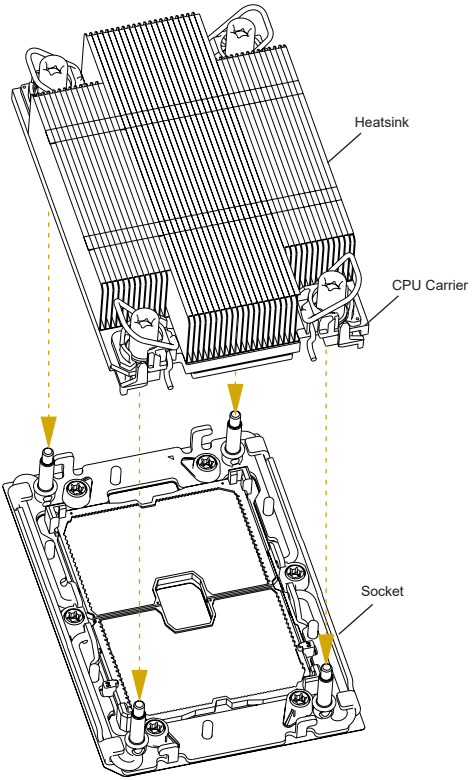

9

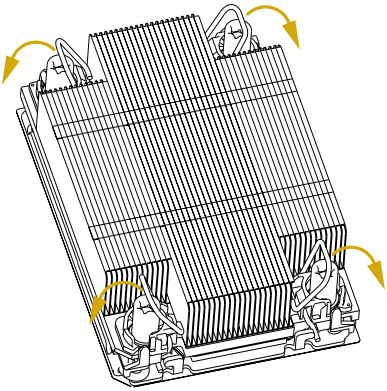

10

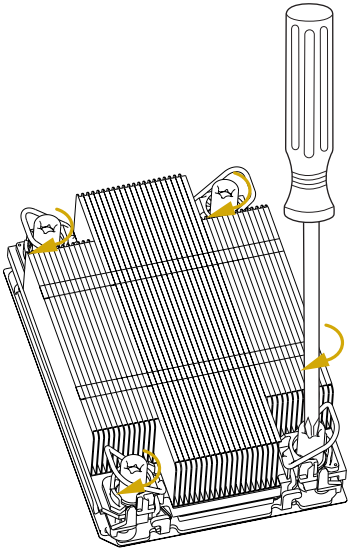

Illustrations in this User Manual are provided for reference only and may slightly differ from actual product appearances.

Installing the CPU (LGA 4094 Socket)

1. *Before you insert the CPU into the socket, please check if the PnP cap is on the socket, if the CPU surface is unclean, or if there are any bent pins in the socket. Do not force to insert the CPU into the socket if above situation is found. Otherwise, the CPU will be seriously damaged.*
2. *Unplug all power cables before installing the CPU.*

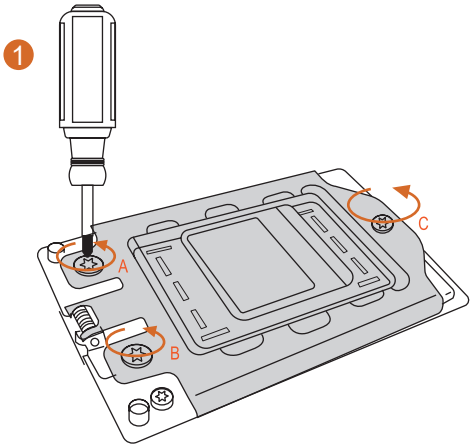

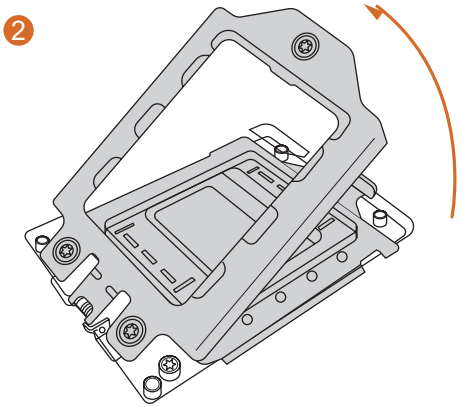

English

3

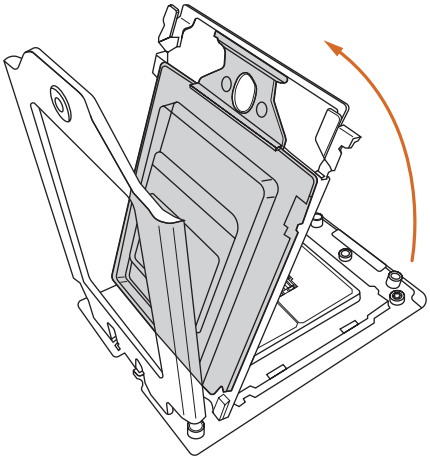

4

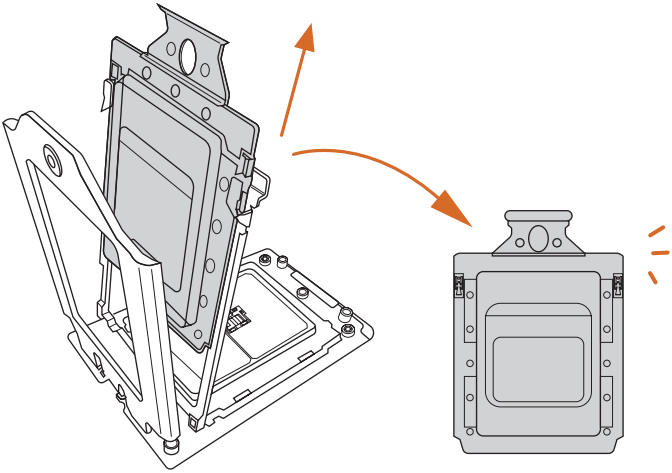

5

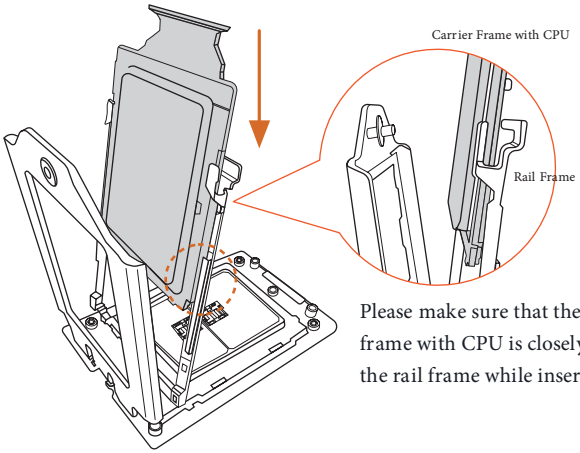

Please make sure that the carrier frame with CPU is closely attached to the rail frame while inserting it.

⚠

Install the carrier frame with CPU. Don't separate them.

6

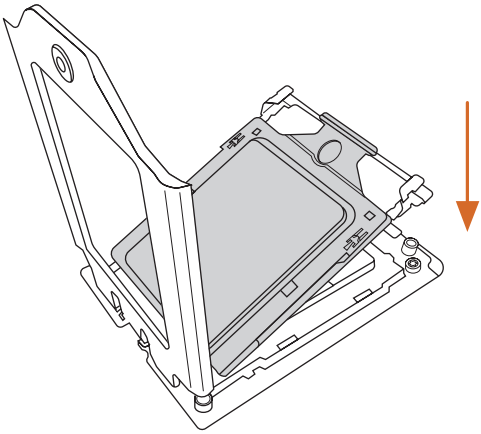

7

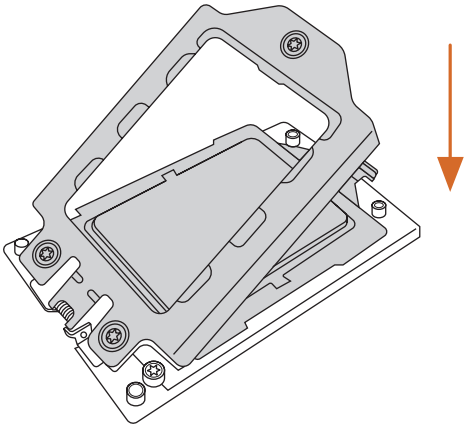

8

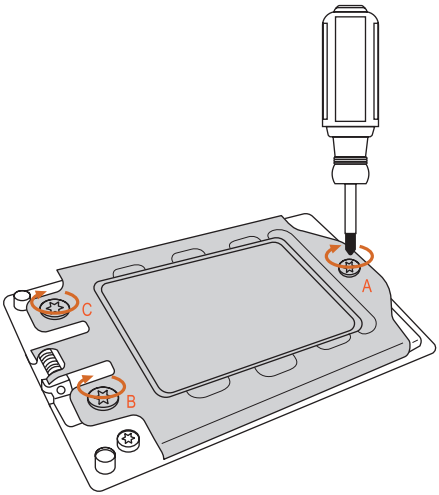

Installing the CPU (LGA 1718 Socket)

1. *Before you insert the 1718-Pin CPU into the socket, please check if the **PnP cap** is on the socket, if the CPU surface is unclean, or if there are any **bent pins** in the socket. Do not force to insert the CPU into the socket if above situation is found. Otherwise, the CPU will be seriously damaged.*
2. *Unplug all power cables before installing the CPU.*

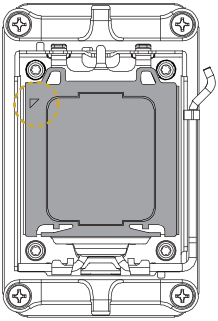

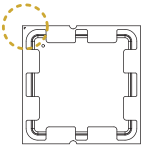

Turn your CPU to the correct orientation before opening the CPU socket cover.

1

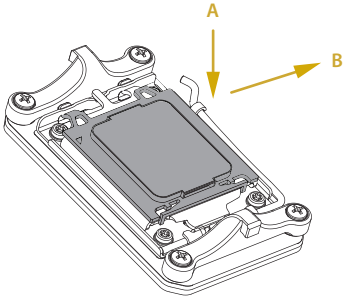

2

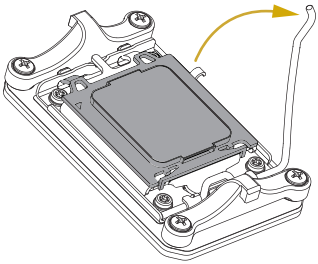

3

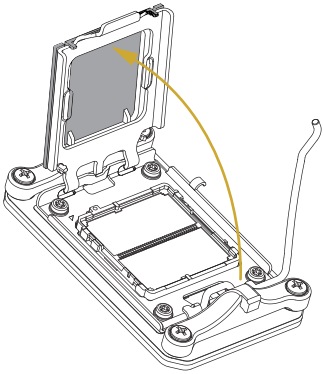

4

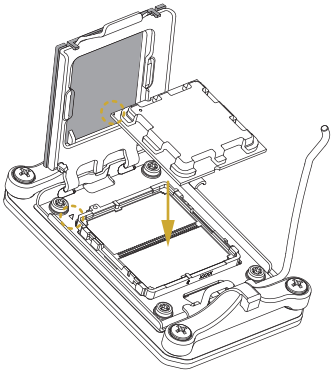

⚠ Carefully place the CPU in as flat as possible. Do not drop it.

5

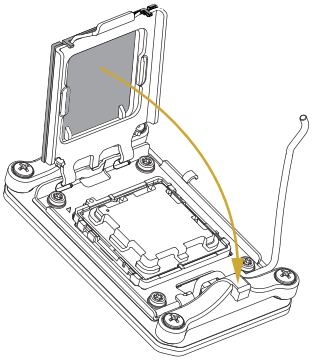

6

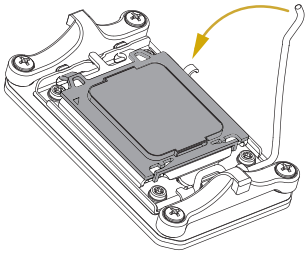

⚠ Make sure the CPU is aligned with the socket before locking it into place.

7

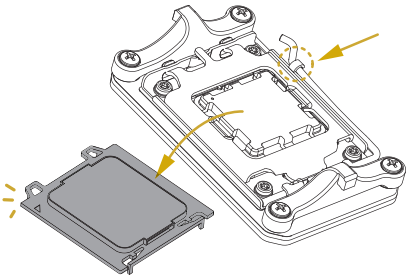

⚠ Make sure the black cover plate is always in place until it pops off when closing the socket lever.

Please save the cover if the processor is removed. The cover must be placed if you wish to return the motherboard for after service.

English

Installing the CPU Fan and Heatsink

After you install the CPU into this motherboard, it is necessary to install a larger heatsink and cooling fan to dissipate heat. You also need to spray thermal grease between the CPU and the heatsink to improve heat dissipation. Make sure that the CPU and the heatsink are securely fastened and in good contact with each other.

Please turn off the power or remove the power cord before changing a CPU or heatsink.

Installing the CPU Cooler

1

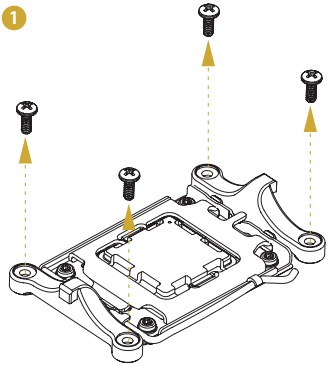

2

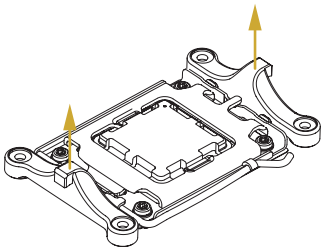

3

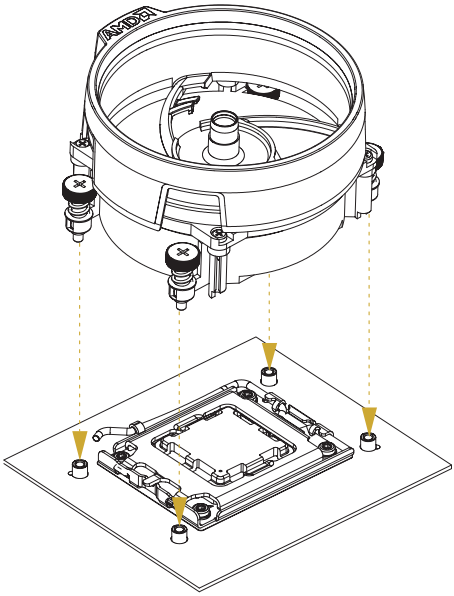

4

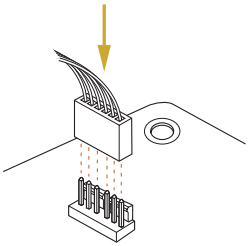

Appendix B

Installation of Memory Modules (DIMM)

The DIMM only fits in one correct orientation. It will cause permanent damage to the motherboard and the DIMM if you force the DIMM into the slot at incorrect orientation. For more information about DIMM installation, please refer to the User Manual that comes with the serverboard you use.

Type A (Single Clip)

1

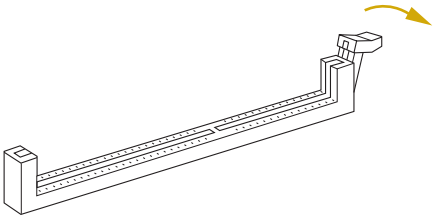

2

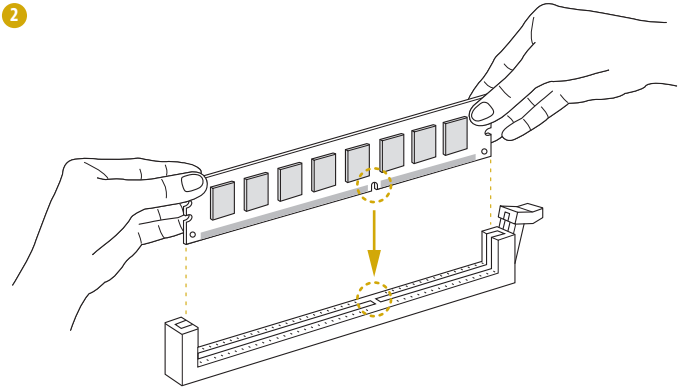

3

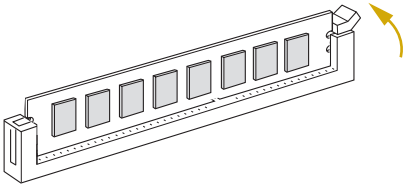

Type B (Two Clips)

1

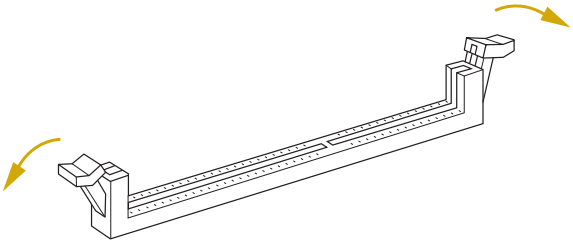

2

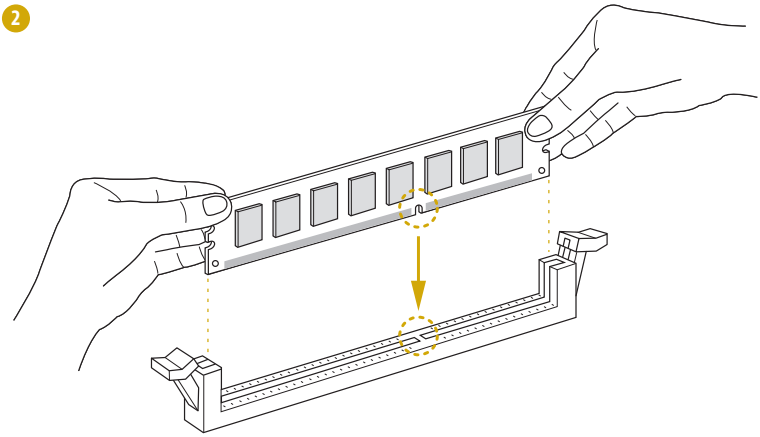

3

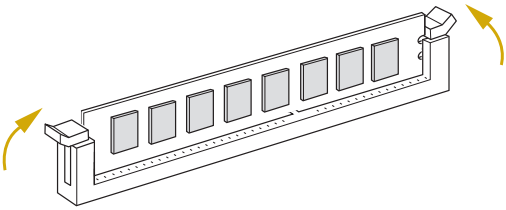

Appendix C

Block Diagram (E3C252D4U)

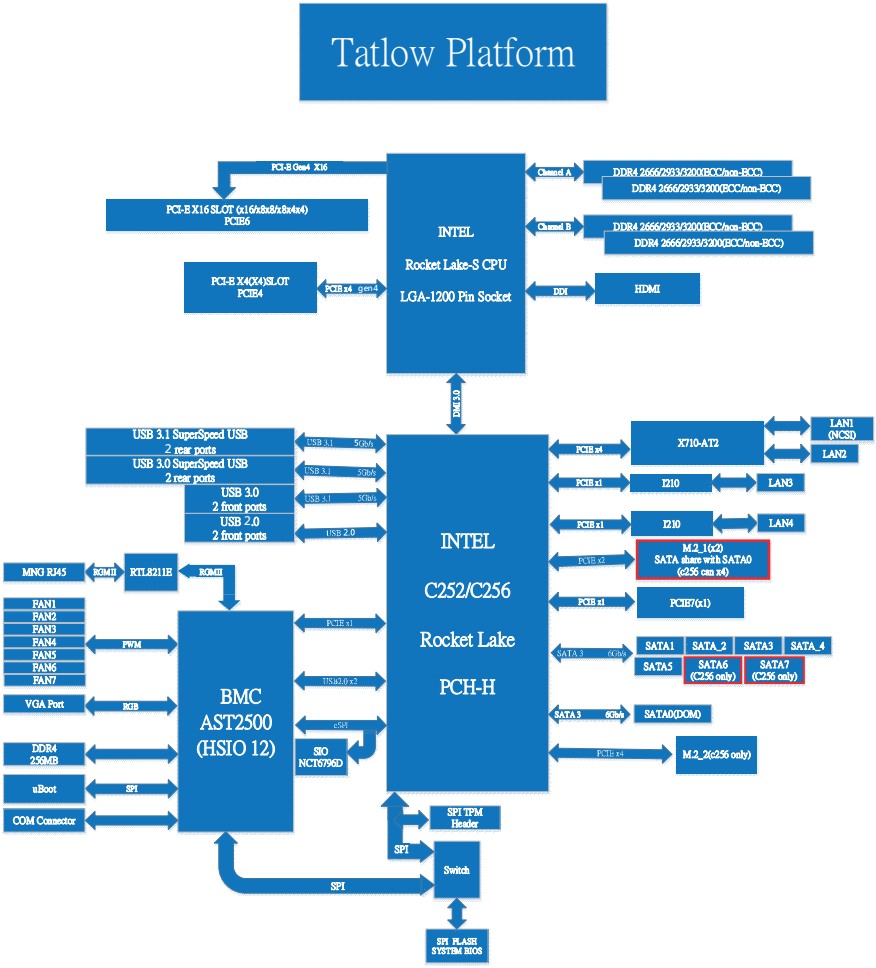

English

Block Diagram (SPC621D8U-2T)

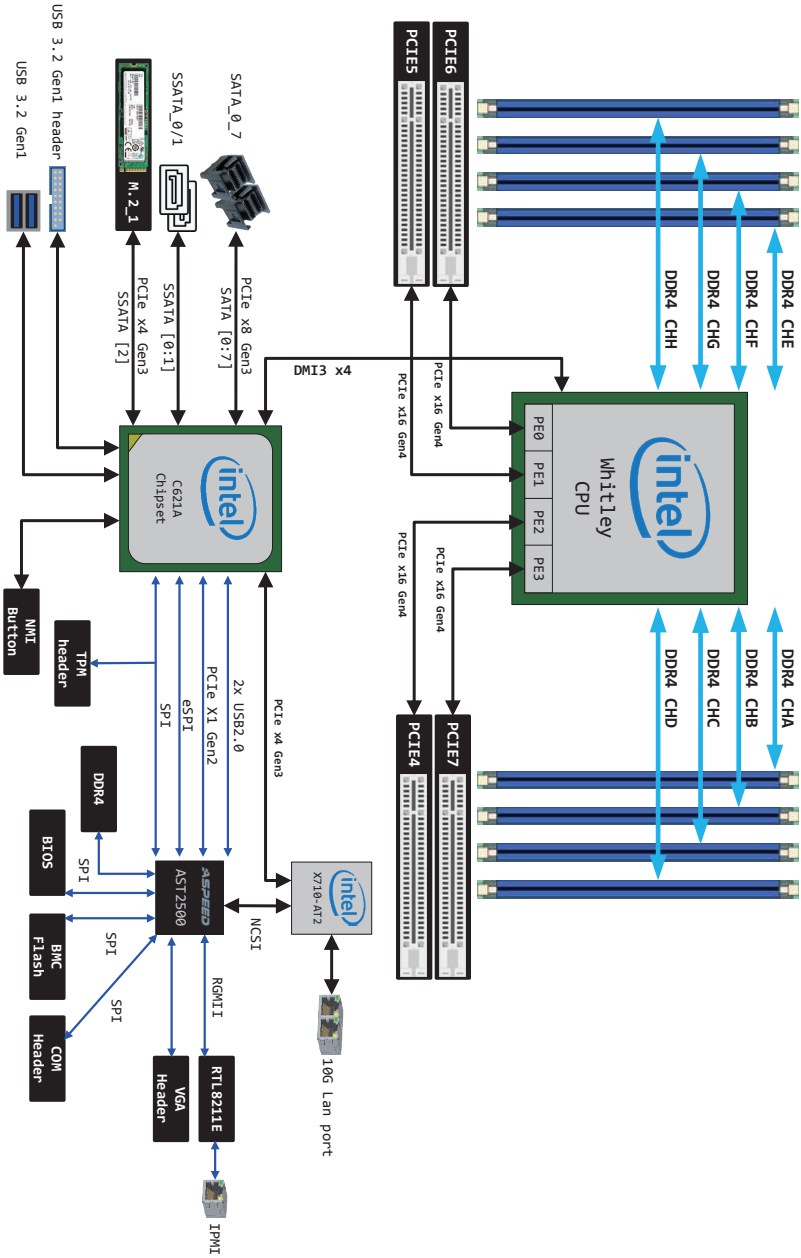

English

Block Diagram (ROMED8U-2T)

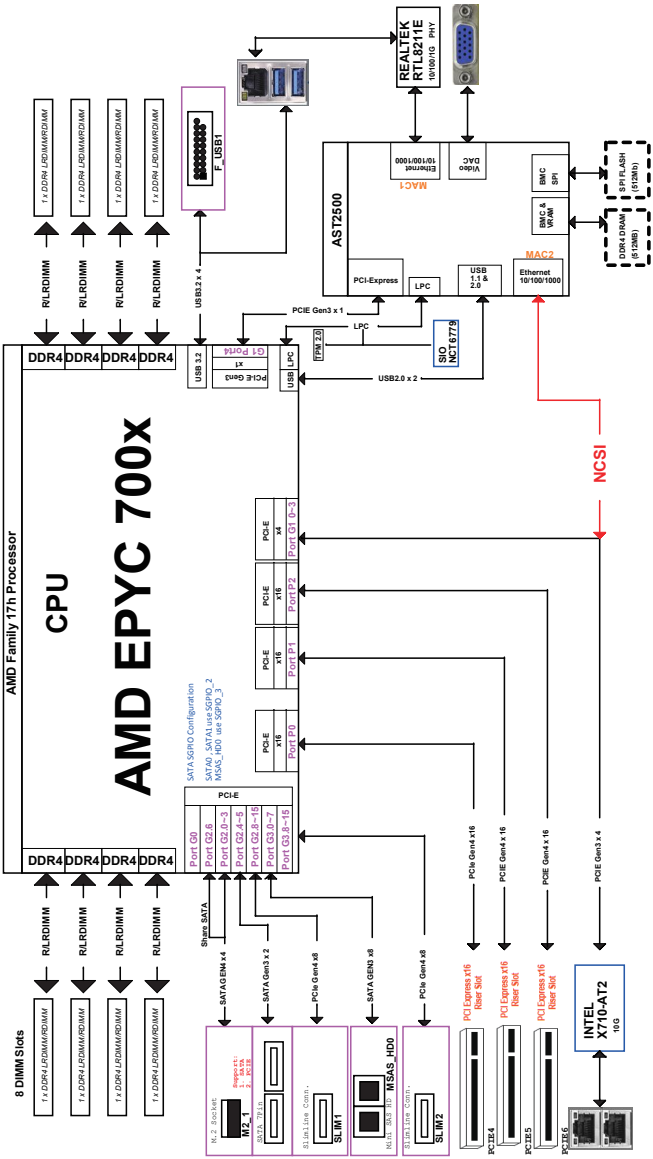

English

Block Diagram (X470D4U)

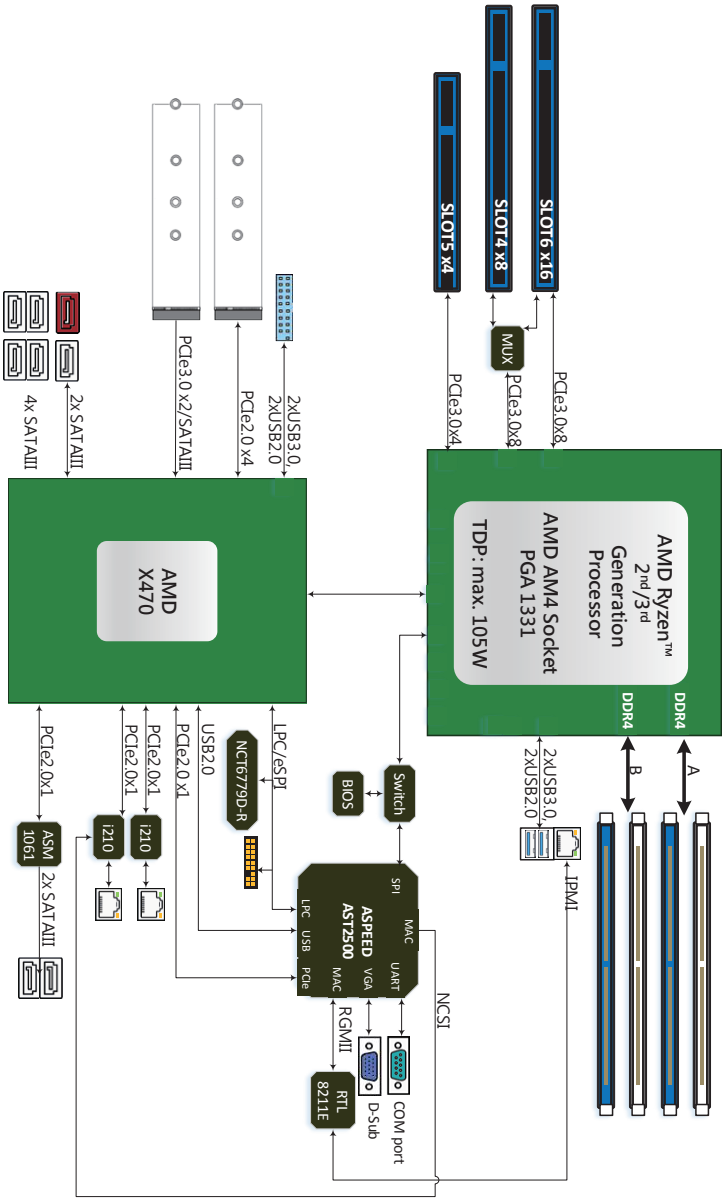

English

Block Diagram (E3C242D4U)

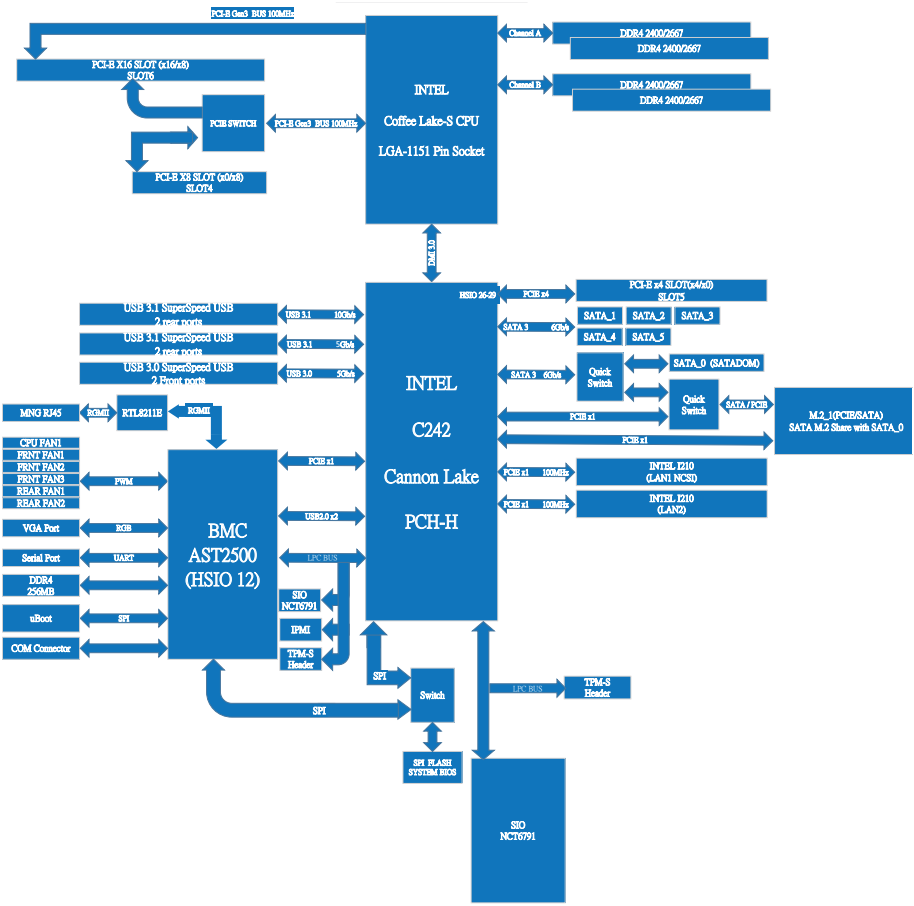

English

Block Diagram (B650D4U-2L2T)

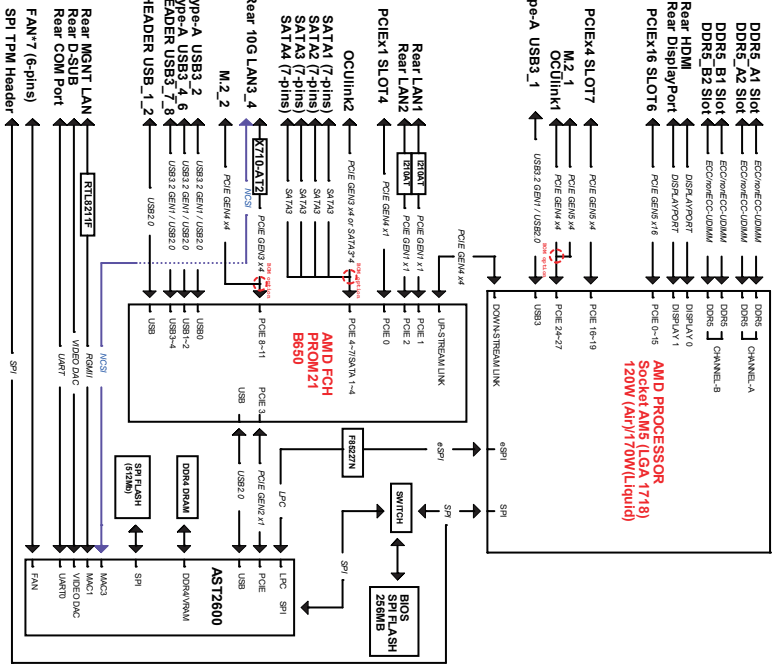

English